DATA SHEET MULTIFUNCTION OVEN - MODEL TC60M GAS OVEN-ELECTRIC GRILL

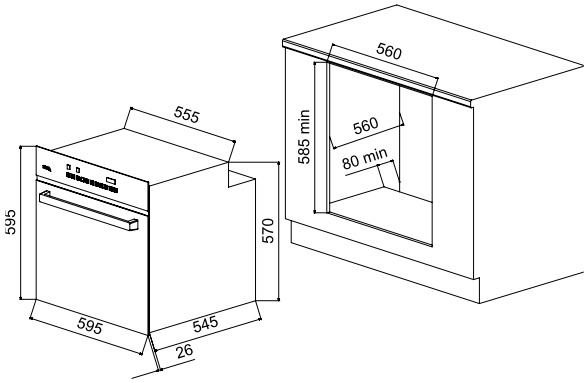

Dimensions (mm)

REMARKABLE FEATURES

- Touch control System by intuitive touch
- Fully electronic Safe and control Gas System by solenoid valve and ionization plug
- Residual Heat Indication
- Programmable function for all oven programs by easy touch selections
- Programmable function for long cooking up to 4 hours
- Cooking time programmer
- High performance cooling fan system
- Close door grilling
- Easy to clean oven cavity
- Front door and control panel in black high tempered glass
- Automatic reignition
- Minute minder
- Clock
- Safety Child lock

DIRECT OVEN FUNCTIONS

POSSIBLE CONBINATION OF OVEN FUNCTIONS WITH FLEXIBLE AND ENERGY EFFICIENT

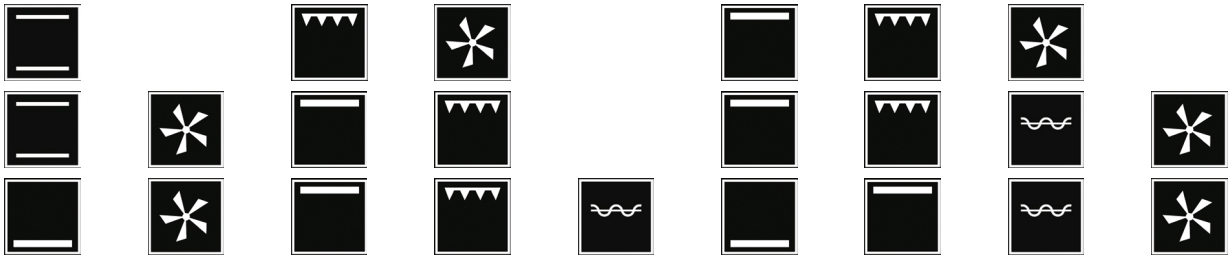

EASY PROGRAMMABLE FUNCTION FOR LONG COOKING

HIGHT PRECISION OF ADJUST OF OVEN CAVITY TEMPERATURE FROM UNDER 50°C

STANDARD ACCESSORIES	OPTIONAL ACCESSORIES
Oven pan	Food probe
Oven Shelf	Telescopic pull-out shelf system
Wire shelf	Deep tray

ELECTRONIC HOME APPLIANCES

ELECTRONIC HOME APPLIANCES SRL
Via Divisione Folgore 5/B - 36100 VICENZA - ITALY Tel +39 0445 851420
Mob.+39 337 1402431 - www.ehagas.com - info@ehagas.com

ELECTRONIC HOME APPLIANCES SRL reserves the right to change specification, design of product described in this literature without notice. FOR MORE INFORMATION CONTACT ELECTRONIC HOME APPLIANCES SRL

DATA SHEET MULTIFUNCTION OVEN - MODEL TC60M GAS OVEN-ELECTRIC GRILL

Gas and Electric Oven Dimensions (mm)	
Width x Depth x Height	595x550x595
Cut Out Dimensions (mm)	
Width x Depth	560x585x560
Volume (Lt)	
Lt.	62
Electrical connection	
Supply Voltage (V~)	100-240
Frequence (Hz)	50/60
Maximun Nominal Power (W)	2100
Gas Nominal Data	
Maximum Nominal Heat Input (kW)	2.75
Gas consumption	
Gas consumption (m3/h)	0,252
Electric Nominal Data	
Grill resistance (W)	2000
Oven Lamp (W)	25
Turnspit (W)	6
Cooling fan (W)	22
Turbo fan/Turbo resistance (W)	32/2000
Performance and energy connection	
Energy efficiency class (Electric)	A
Gas type and pressure COMPANY DEFAULT G20-20mbar Natural	

ELECTRONIC HOME APPLIANCES

ELECTRONIC HOME APPLIANCES SRL
Via Divisione Folgore 5/B - 36100 VICENZA - ITALY Tel +39 0445 851420
Mob.+39 337 1402431 - www.ehagas.com - info@ehagas.com

ELECTRONIC HOME APPLIANCES SRL reserves the right to change specification, design of product described in this literature without notice. FOR MORE INFORMATION CONTACT ELECTRONIC HOME APPLIANCES SRL